SPECIFICATION

For Thermopile Temperature Sensor

RoHS

Model Name

UK-ALL-237

1.Descriptions
2.Features
3.Applications
4.Drawing
5.Parameter

R-EK.RU sales@r-ek.ru
РАДИОЭЛЕКТРОННЫЕ КОМПОНЕНТЫ

UK-ALL-237

1. Descriptions

The UK-ALL-237 is a thermopile temperature sensor based on MEMS (Micro-ElectroMechanical Systems) technology. This thermopile detector consists of a thermopile MEMS chip, a F5.5 infrared band pass filter, a NTC thermistor for temperature compensation and a small size TO-46 package.

2. Features

Non-contact surface temperature measuring
TO housing with an F5.5 infrared filter
Using NTC thermistor for ambient temperature compensation
Suitable for human body temperature detecting and Industrial temperature measurement
Fast response time
High sensitivity

3.Applications

Non-contact infrared thermometer
Microwave oven
Automatic induction equipment
Heating, Ventilation and Air Conditioning(HVAC)
Appliance

R-EK.RU sales@r-ek.ru
РАДИОЭЛЕКТРОННЫЕ КОМПОНЕНТЫ

UK-ALL-237

4.Drawing

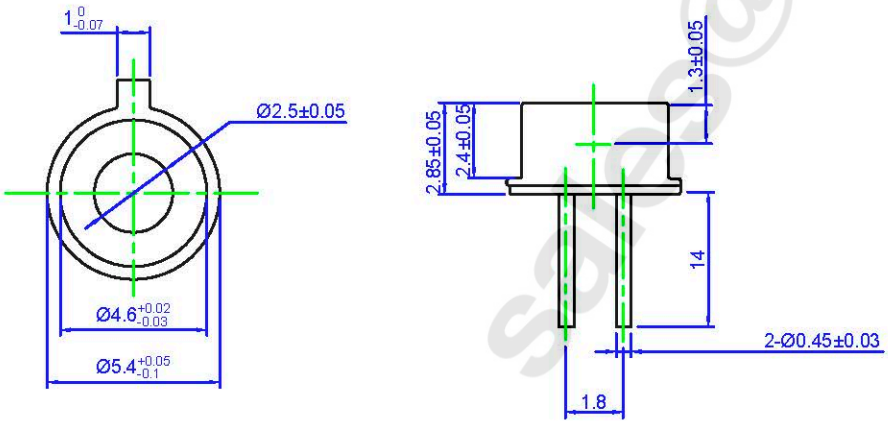

Unit: mm

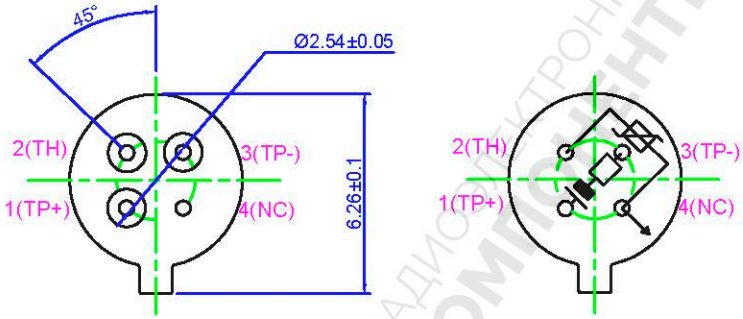

Bottom

Pin No.	Description
1	Thermopile+(TP+)
2	Thermistor(TH)
3	Thermopile-(TP-)
4	GND

Pin Function Description
1 Thermopile+(TP+) : Thermopile Output DC Voltage+ pin.
2 Thermistor(TH): Ambient Temperature Compensation Resistance+ pin.
3 Thermopile-(TP-): Thermopile Output DC Voltage- pin.
4 GND: Ambient Temperature Compensation Resistance- pin and GND.

Notes
Tolerance±0.15mm unless otherwise specified.

R-EK.RU sales@r-ek.ru
РАДИОЭЛЕКТРОННЫЕ КОМПОНЕНТЫ

UK-ALL-237

5. Parameter

5.1 Thermopile parameter

Specification	Condition	Min.	Typ.	Max.	Unit
Chip Size			1.85*1.85		mm²
Active Area			0.7X0.7		mm²
Responsivity	Black body=500K,1HZ @temp=25 ℃		60		V/W
Detectivity	Black body=500K,1HZ @temp=25 ℃		1.21E08		cm·Hz$^{1/2}$/W
NEP	Black body=500K,1HZ @temp=25 ℃		0.59		nW·Hz$^{1/2}$
Voltage Response	Black body=500K,1HZ @temp=25 ℃		29		V·mm²/W
Thermopile Res	@temp=25℃	65	75	85	kΩ
TC of Thermopile			-0.11		%/ ℃
Noise Voltage	@temp=25 ℃	33	35	37	nV/Hz$^{1/2}$
Time Constant			16		ms
Field of View(FOV)	Degree at 50% signal level		102		°
Operating Temp			-40~120		℃
Storage Temp			-40~120		℃
Thermistor Resistance	@temp=25℃		100 +3%		k
TC of Thermistor(B)	Defined at 25/50 ℃		3950 ±1%		K

5.2. NT Temperature VS Resistance Table

Temp.(℃)	Rmin(kΩ)	Rnor(kΩ)	Rmax(kΩ)
-40	3073.524	3281.143	3499.634
-30	1644.113	1744.117	1848.539
-20	912.905	962.695	1014.286
-10	524.122	549.618	575.836
0	311.198	324.623	338.322
10	191.179	198.447	205.806
20	120.819	124.832	128.863
25	97.000	100.000	103.000
30	77.949	80.534	83.130
40	51.246	53.166	55.108
50	34.450	35.882	37.339
60	23.673	24.749	25.850
70	16.576	17.391	18.229
80	11.812	12.433	13.076
90	8.546	9.024	9.522
100	6.275	6.647	7.034
110	4.671	4.963	5.267
120	3.523	3.753	3.995

R-EK.RU sales@r-ek.ru
РАДИОЭЛЕКТРОННЫЕ КОМПОНЕНТЫ

UK-ALL-237

5.3 **Filter Transmission Curve**

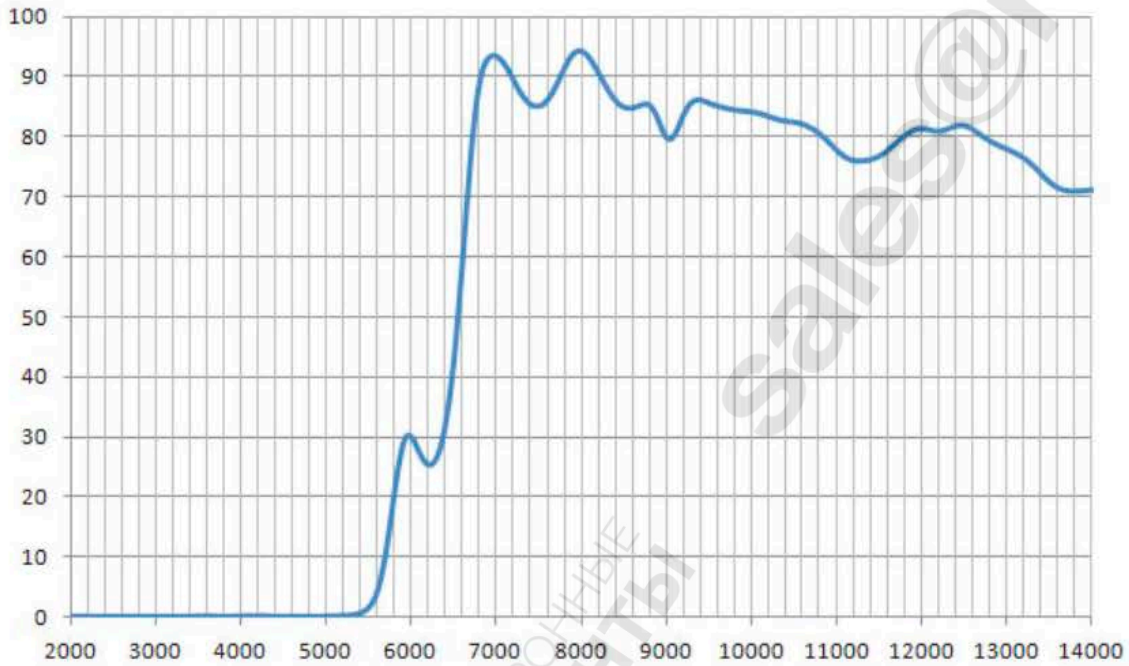

5.4 Sensitivity Output Curve

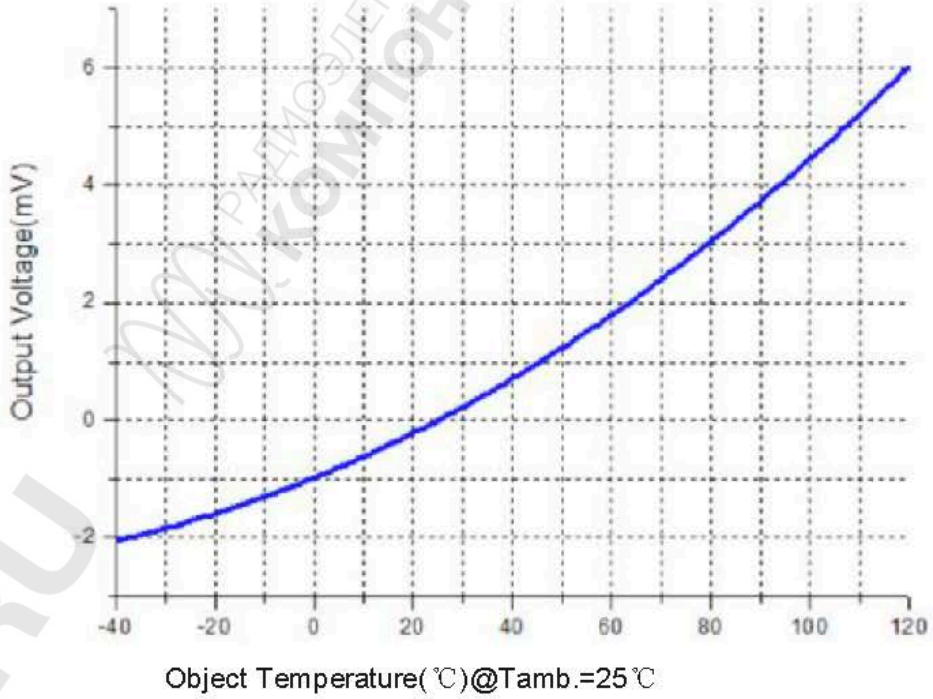

R-EK.RU
sales@r-ek.ru
РАДИОЭЛЕКТРОННЫЕ КОМПОНЕНТЫ